cronologic

xHPTDC8-PCIe

Product Brief

xHPTDC8-PCIe

www.cronologic.de

Introduction

Our most versatile TDC combines the precision of the xTDC4 with the channel count and the flexibility of the HPTDC8.

Don't let yourself be restricted to common start configurations! With the xHPTDC8-PCIe you can set up your system any way you like. The device will provide you with an infinite stream of timestamps - one for each input pulse. You may filter them in software as needed - or you let the hardware itself group the measurements into time windows around a trigger pulse in a convenient data structure.

Like the xTDC4-PCIe, the xHPTDC8-PCIe provides very high precision measurements with almost no cycle to cycle jitter. You can expect an RMS error very close to the quantization error. The linearity is also practically perfect.

The PCIe bus master writes into a ring buffer that is fully controlled by hardware, ensuring low CPU load at high throughput.

Our TiGer timing generator allows you to create digital output pulse patterns on all connectors to control the timing of your experiment.

The newly added 18 bit ADC can monitor an analog voltage in your system in sync with the data acquisition or controlled by external pulses.

Block diagram

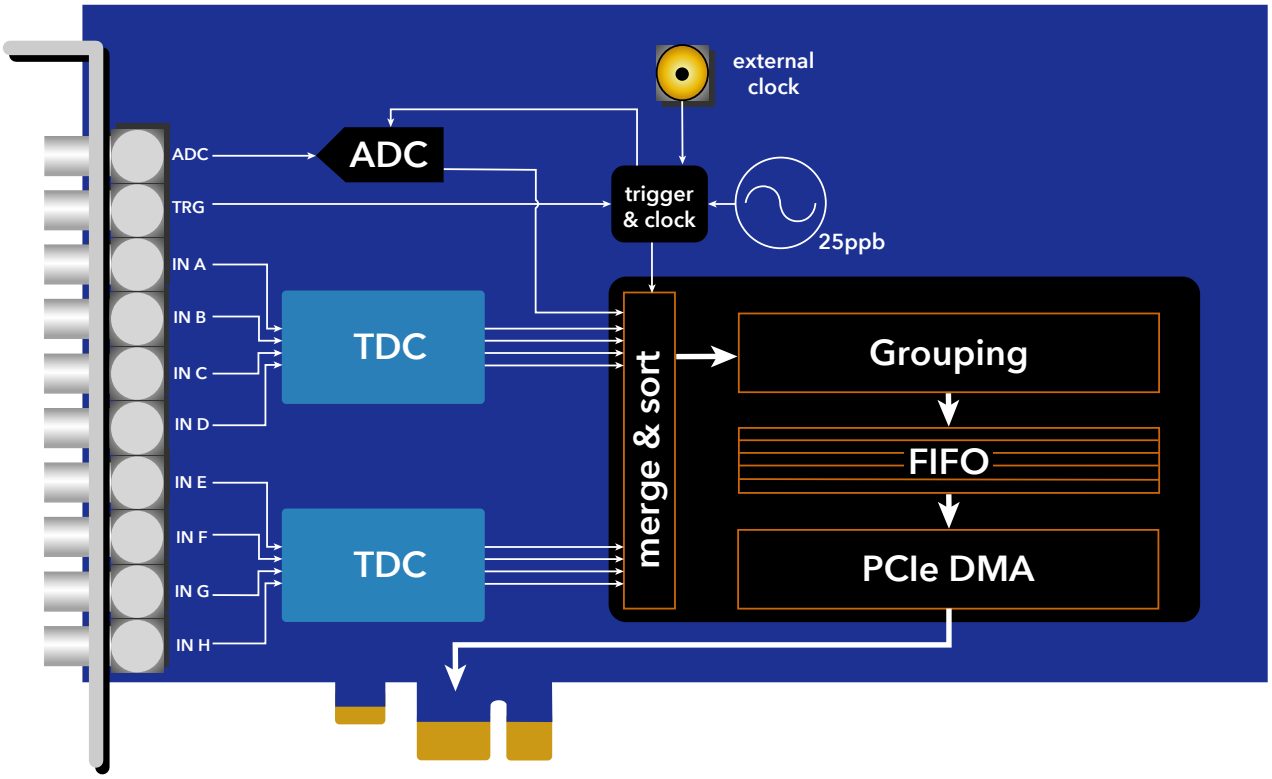

Features

Forget about data anomalies - and record your data with tremendous precision.

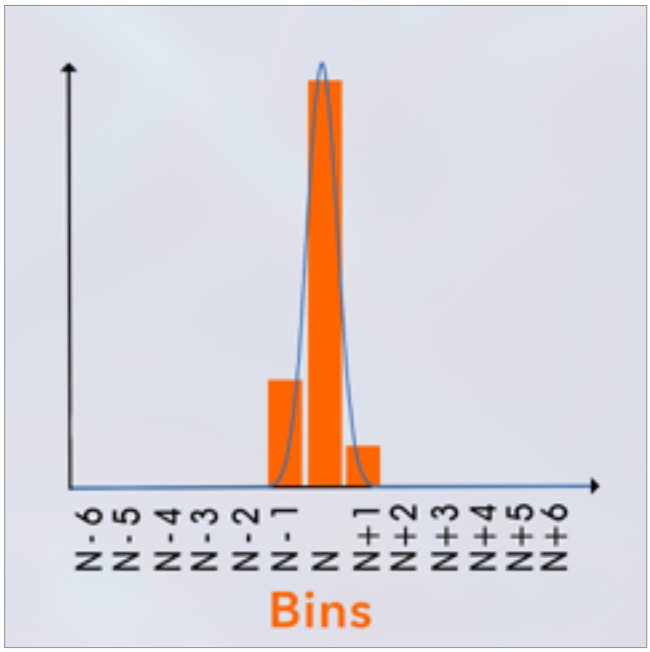

The occurring cycle to cycle jitter of the xHPTDC8-PCIe is way below the bin size of 13 ps.

Therefore you can expect an RMS error below 7 ps for your measurements.

Only 5 ns have to be between consecutive hits on the same input channel in order for them to be reliably recognized.

The xHPTDC8 records events without dead time at a readout rate of approx. 48 MHits/s.

Bipolar threshold: Make use of a wide range of detectors or constant fraction discriminators.

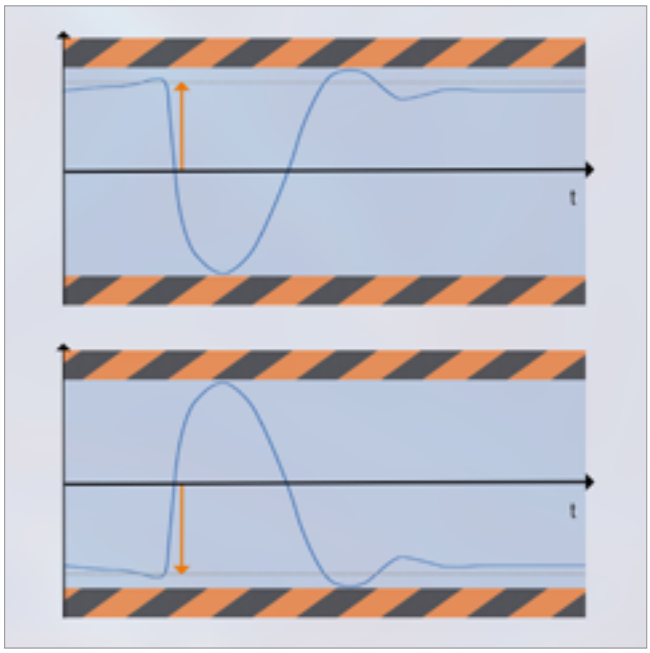

When developing the device, our focus was on flexibility in use.

Any positive or negative thresholds with a configurable voltage can therefore be adjusted to comply with a multitude of single-ended signaling standards.

This allows you to use the xHPTDC8 with a wide range of detectors or constant fraction discriminators (CFD).

Make use of your individual TiGer Timing Generator setup.

All LEMO-00 inputs can also be used to output AC-coupled periodic pulse patterns to control external devices in your experimental setup.

The exact timing of these patterns is measured by the TDC.

For more flexibility and different applications, each TiGer block can be triggered by an arbitrary combination of inputs, including the auto-trigger.

By the way: In BIDI and BIPOLAR mode, pulses can be provided while still using the corresponding connector as an input.

As a result, channels are not wasted in order to generate control pulses.

Group data with versatile trigger windows.

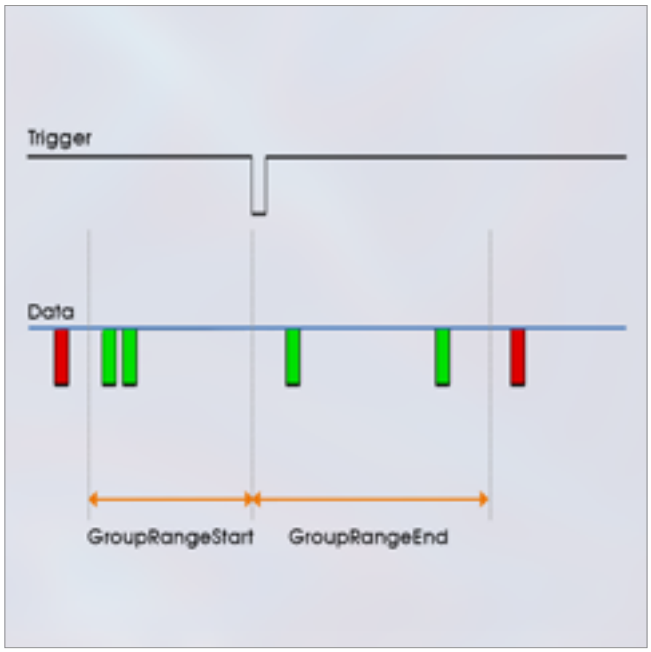

There is no limit in range of time measurement for this TDC. It will output an infinite stream of timestamps for all incoming pulses.

In case you prefer common start or common stop the device can output structured data that mimic these modes.

The grouping function of the xHPTDC8 enables the user to define any channel as a trigger channel. Only hits arriving within a configurable time window around the trigger will be recorded.

Make use of the internal ADC to monitor your control voltage at intervals or triggers.

The xHPTDC8 is equipped with an ADC that can be triggered in three ways:

- Whenever there is an edge on the ADC trigger connector, the voltage on the ADC input connector is sampled.
- By using the TiGer and the internal auto-trigger, so that you can sample an analog signal in defined intervals or in random periods.
- By using the TiGer with triggers relative to a TDC input

A typical application would be to sample some slow control voltage once per start signal.

Reduce buffer requirements and CPU load by setting veto or gate inputs.

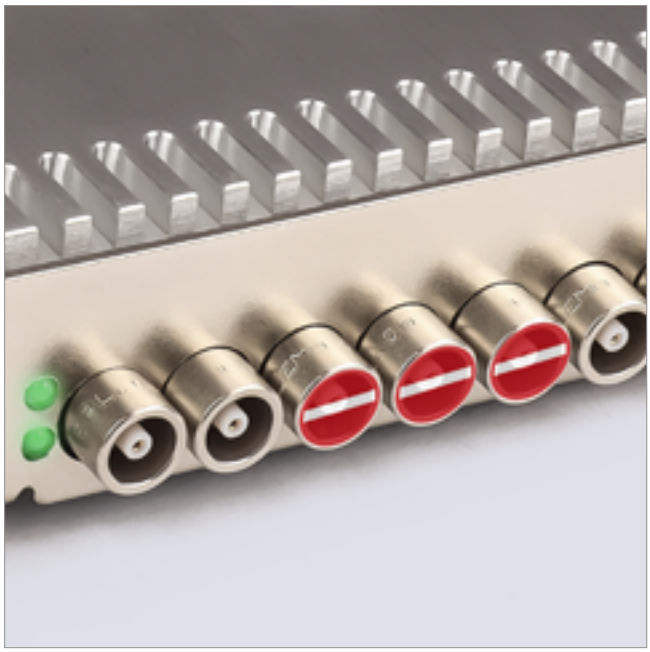

With the xHPTDC8 you can block inputs from being measured for a certain period of time relative to an input pulse.

You can decide for yourself whether the exact definition of the recording or the blocking timespan is more suitable for your application.

Such a configuration of the gating block can reduce the bandwidth and buffer usage significantly.

This is a useful feature in setups where the trigger creates a lot of noise.

Synchronize multiple xHPTDC8 boards for measuring more channels.

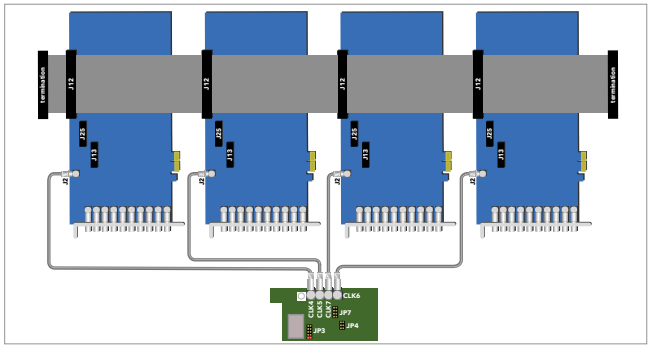

In measurement setups that require more than eight TDC inputs, up to eight boards can be synchronized within a system.

Such setups will be managed automatically by the xHPTDC8 API.

Tip: For synchronizing up to four boards, cronologic offers the ClockBox product that conveniently makes four clock signals available inside the PC enclosure.

Plus: In case your PC mainboard features not enough PCIe slots, you might be interested in our NdigoCrate enclosure which extends the number of available connectors via cable.

There are no additional drivers required.

Rising or falling edge - you decide what is recorded.

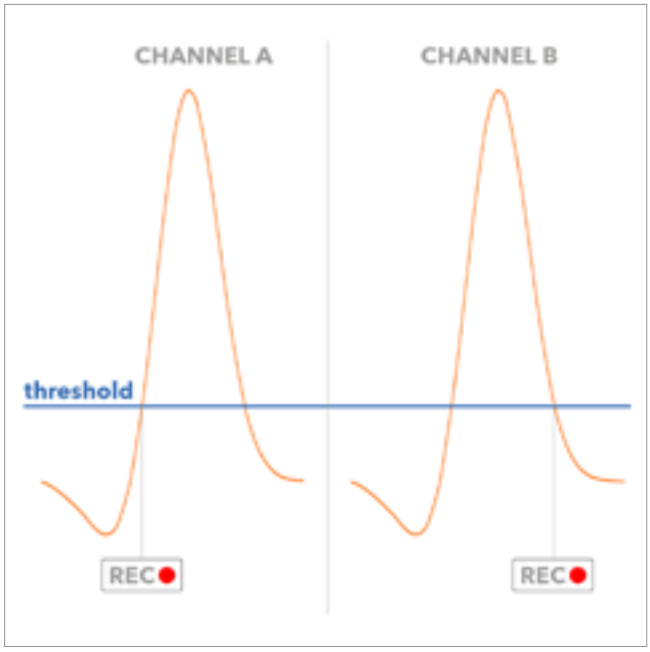

Depending on your application, for a more convenient evaluation it is useful that it can be determined in advance whether the rising or falling edge should be recorded.

However, there are also users who would like to individually define one of these two measurement methods for each measurement channel.

With the xHPTDC8 this is no problem, as you can select the type of recording individually for each channel.

cronologic

Technical Data - xHPTDC8-PCIe

Optimized for	flexibility + performance
TDC channels @ bin size	8 @13 ps
Additional inputs	event triggered ADC
Connectors	10x LEMO-00
Bin size	13 ps
Double pulse resolution	5 ns
Multihit	unlimited
Dead time between groups	none
Readout rate	48 MHits/s
Range	unlimited
Common start / stop	yes / yes
Number of boards that can be synced	8
Readout interface	PCIe x1
Time base	50 ppb on board

cronologic
GmbH & Co. KG

Jahnstraße 49
60318 Frankfurt
www.cronologic.de
fon: +49 (0) 69 173 20 256-0
UStID: DE235184378

CR-PRODUCTBRIEF-xHPTDC8 -09-2021-01-eng